Electrolux

French Door Refrigerators

EI27BS26J S, EI27BS26J W, EI27BS26J B

Featuring IQ-Touch™ Electronic Controls

ENERGY STAR

Most Usable Capacity[1]

Most usable space inside, same space on the outside, so you'll have space for everything from party platters and beverages to kids' snacks and juice boxes.

IQ-Touch™ Controls

For those who like to have their options always visible, the IQ-Touch™ control panel displays your options at all times.

Luxury-Glide® Cool Zone™ Drawer

This drawer keeps contents chilled, so it's perfect for wine and beer or even snacks and juice boxes.

SpillSafe® Glass Shelves

Designed to keep spills contained, making cleanup easy.

27 CU. FT. STANDARD-DEPTH FRENCH DOOR REFRIGERATORS

Capacities	
Total Capacity	26.6 Cu. Ft.
Fresh Food Volume	19.0 Cu. Ft.
Freezer Volume	7.6 Cu. Ft.
Total Shelf Area	28.5 Sq. Ft.
Fresh Food Shelf Area	22.4 Sq. Ft.
Freezer Shelf Area	6.1 Sq. Ft.
Exterior	
Signature Soft-Arc Doors and Handle Design	Yes
IQ-Touch™ Electronic Controls	Yes
Door Hinge Covers	Yes
Ice/Water Dispenser	Yes
Perfect Set® Temperature Control System and Display	Yes
Crushed/Cubes/Water	Yes
Air and Water Filter Indicator/Reset	Yes
Ice Maker On/Off	Yes
Fast Freeze™	Yes
Lock	Yes
Dispenser Light Control	Yes
Fresh Food Conveniences	
PureAdvantage® Water & Ice / Air Filtration	Yes
Water Filter Location	Bottom Left
Temp Alarm System / Door Ajar Alarm / Power Failure Alarm	Yes
SpillSafe® Glass Shelves	1 Quarter Width, 3 Half Width
Luxury-Glide® Humidity-Controlled Left Crisper	Yes
Luxury-Glide® Humidity-Controlled Right Crisper	Yes
Luxury-Glide® Soft-Closing Perfect Temp® Drawer	
Luxury-Glide® Cool Zone™ Drawer	Yes
Wine and Beverage Mat	
Clear Gallon Door Bins (Adjustable)	2
Clear 2-Liter/1/2-Gallon Door Bins (Fixed)	2
Clear Dairy Bin	Yes
Clear Condiment Bottle Door Storage	1
Tilt-Out Can Racks	2
Luxury-Design® LED Ramp-Up Multilevel Lighting	Yes
Automatic Ice Maker	Yes
Freezer Conveniences	
Self-Closing Drawer	Yes
Sliding Freezer Baskets	2 Luxury-Glide® (1 Deep Wire w/Divider)
Soft Freeze Bin	
Pizza Bin	
Plastic Basket Tray	1
Tilt-Out Wire Door Racks	1
Luxury-Design® Incandescent Ramp-Up Multilevel Lighting	Yes
Additional Features	
ENERGY STAR® Maximum Rebate*	Yes
Sabbath Mode (Star-K® Certified)	Yes
Specifications	
Color –	
Stainless Steel	S
White	W
Black	B
Product Dimensions –	
Height (with Hinges and 3/8" Rollers)	69-1/2"
Cabinet Width / Door Width	35-5/8" / 36"
Depth (to Center of Arc) (with 90° Door Open) (with Drawer Fully Extended Including Handle)	33" 47-7/16" 54-3/4"
Power Supply Connection Location	Right Bottom Rear
Water Inlet Location	Left Bottom Rear
Voltage Rating	120V/60Hz/15 or 20A
Connected Load (kW Rating) @ 120 Volts‡	1.02
Minimum Circuit Required (Amps)	15
Shipping Weight (Approx.)	365 Lbs.

‡An electrical supply with grounded three-prong receptacle is required. The power supply circuit must be installed in accordance with current edition of National Electrical Code (NFPA 70) and local codes & ordinances.

**Select qualified models/subject to change without notice.*

NOTE: Always consult local and national electric & plumbing codes. Refer to Product Installation Guide for detailed installation instructions on the web at electroluxappliances.com.

Specifications subject to change.

[1] 29 cu. ft. and under, exterior ice and water, within the competitive set.

Wall Ovens
Warmer Drawers
Cooktops
Built-In Ranges
Freestanding Ranges
Microwaves
Vent Hoods
Dishwashers / Kitchen Cleanup
Refrigerators
Freezers
Under Counter
Washers / Dryers

Electrolux

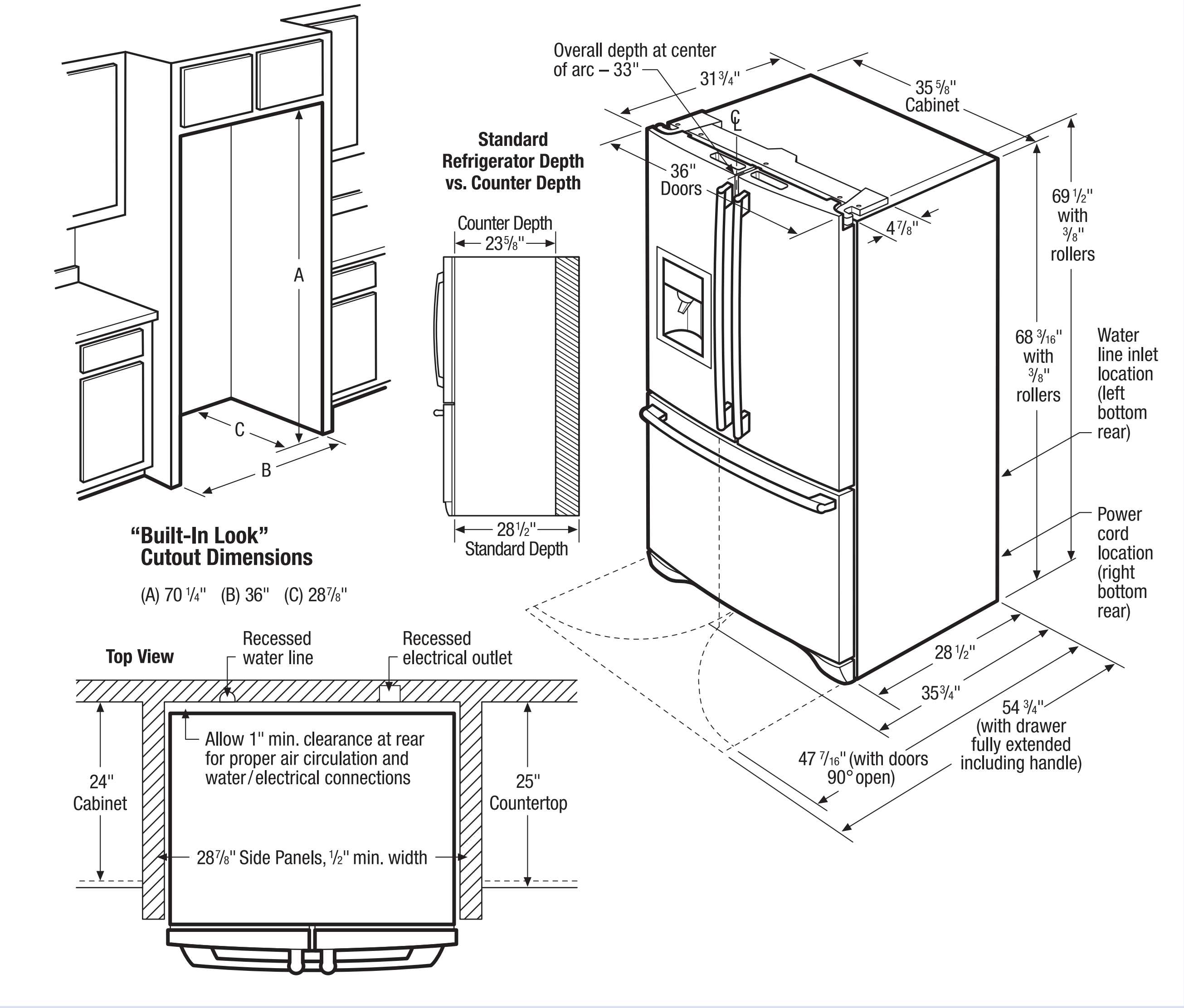

Standard-Depth French Door Refrigerator Specifications

- Product Weight – 360 Lbs.
- An electrical supply with grounded three-prong receptacle is required. The power supply circuit must be installed in accordance with current edition of National Electrical Code (NFPA 70) and local codes & ordinances.
- Voltage Rating – 120V/60Hz/15 or 20 Amps
- Connected Load (kW Rating) @120 Volts = 1.02 kW
- Amps @120 Volts = 8.5 Amps
- Always consult local and national electric & plumbing codes.
- Floor should be level surface of hard material, capable of supporting fully loaded refrigerator.
- When installing refrigerator adjacent to wall, cabinet or other appliance that extends beyond front edge of unit, 20" minimum clearance recommended to allow for optimum 120° to 180° door swing, providing complete drawer/crisper access and removal. *(Absolute 4-1/2" minimum clearance will ONLY allow for 90° door swing which will provide drawer/crisper access with restricted removal.)*
- To ensure optimum performance, avoid installing in direct sunlight or close proximity to range, dishwasher or other heat source.
- For proper ventilation, front grille MUST remain unobstructed.
- Recess electrical outlet when possible.
- Water recess on rear wall recommended to prevent water line damage.
- Water Pressure – Cold water line must provide between 30 and 100 pounds per square inch (psi).
- Copper tubing with 1/4" O.D. recommended for water supply line with length equal to distance from rear of unit to household water supply line plus 7 additional feet. Optional Water Supply Installation Kits available.
- Adjustable front rollers to assist with door alignment.

"Built-In Look" Specifications

- Minimum opening of 70-1/4" H x 36" W x 28-7/8" D required to allow for ease of installation, proper air circulation, and plumbing/electrical connections.
- Remove all wall/floor molding prior to installation.

Note: For planning purposes only. Refer to Product Installation Guide on the web at electroluxappliances.com for detailed instructions.

Electrolux Major Appliances, N.A.

USA • 10200 David Taylor Drive • Charlotte, NC 28262 • 1-877-4electrolux (1-877-435-3287) • electroluxappliances.com
CANADA • 5855 Terry Fox Way • Mississauga, ON L5V 3E4 • 1-800-265-8352 • electroluxappliances.ca

C US

High standards of quality at Electrolux Home Products, Inc. mean we are constantly working to improve our products. We reserve the right to change specifications or discontinue models without notice.

© 2011 Electrolux Home Products, Inc.
Printed in the U.S.A.

General Installation Guidelines

with French Door Refrigerator

Electrolux

Use these dimensions and clearance instructions for planning purposes only. For detailed installation instructions, refer to installation guide, packed with product, or on the web at electroluxappliances.com.

Front

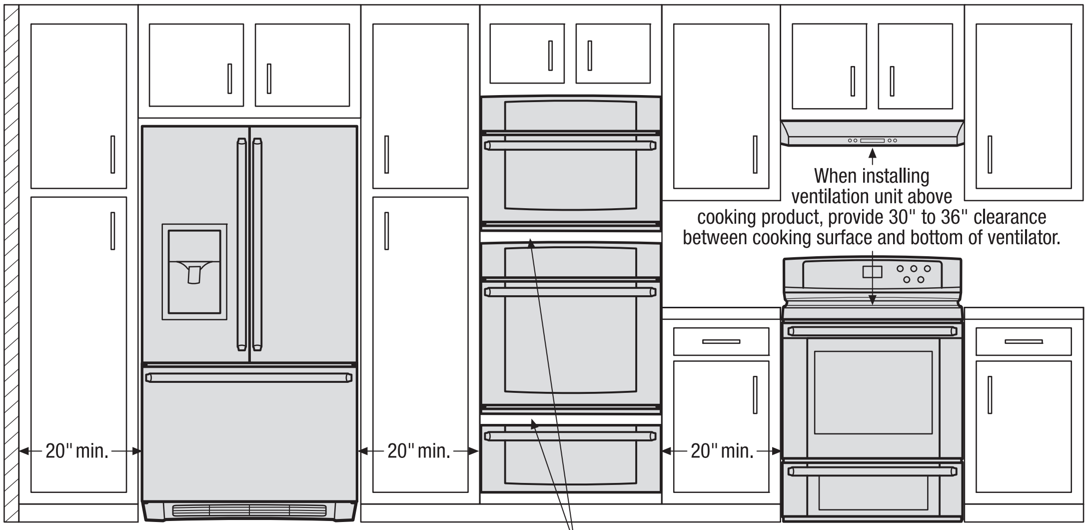

When installing appliances adjacent to each other, 20" minimum distance between each appliance required.

When installing built-in cooking appliances in combination, 2" minimum visible gap between appliance faceplates required.

Top

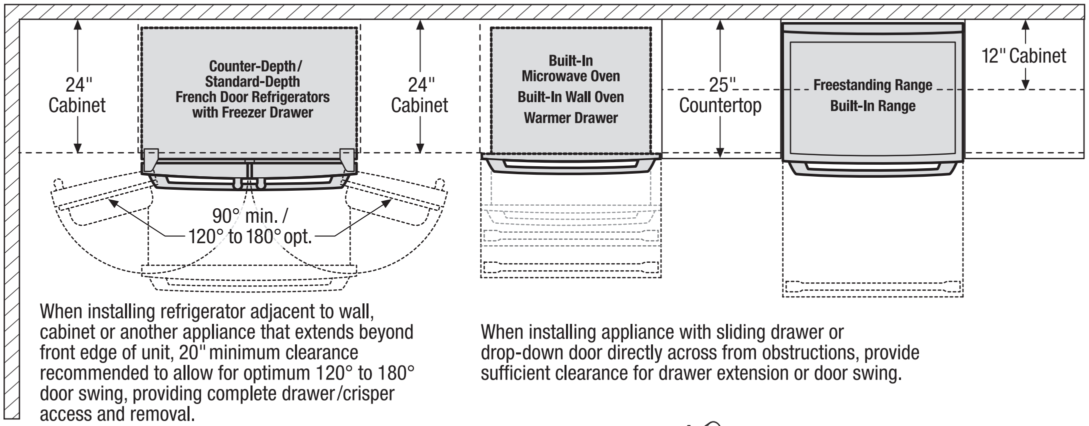

When installing refrigerator adjacent to wall, cabinet or another appliance that extends beyond front edge of unit, 20" minimum clearance recommended to allow for optimum 120° to 180° door swing, providing complete drawer/crisper access and removal.

When installing appliance with sliding drawer or drop-down door directly across from obstructions, provide sufficient clearance for drawer extension or door swing.

Front

To ensure optimum performance, avoid installing refrigeration appliances in direct sunlight or near heat source.

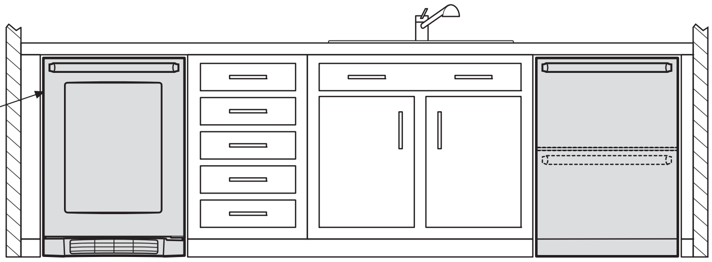

Top

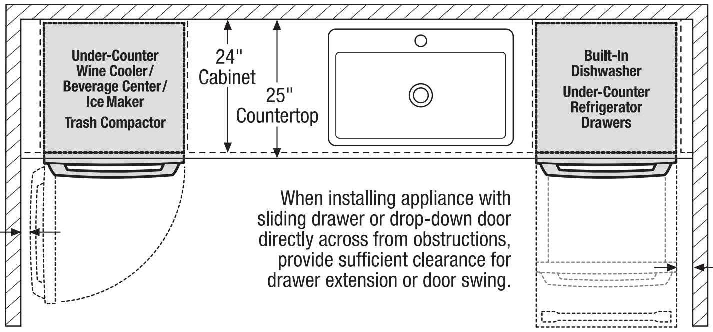

When installing appliance with side-swing door adjacent to wall, cabinet, or other obstruction that extends beyond front edge of appliance, door swing and handle clearance must be sufficient to allow access to appliance interior.

When installing appliance with sliding drawer or drop-down door directly across from obstructions, provide sufficient clearance for drawer extension or door swing.

When installing appliance with sliding drawer or drop-down door adjacent to wall, cabinet, or other obstruction that extends beyond front edge of appliance, allow 2" minimum clearance between drawer or door and obstruction.

Electrolux Major Appliances, N.A.

USA • 10200 David Taylor Drive • Charlotte, NC 28262 • 1-877-4electrolux (1-877-435-3287) • electroluxappliances.com
CANADA • 5855 Terry Fox Way • Mississauga, ON L5V 3E4 • 1-800-265-8352 • electroluxappliances.ca

High standards of quality at Electrolux Home Products, Inc. mean we are constantly working to improve our products. We reserve the right to change specifications or discontinue models without notice.

© 2010 Electrolux Home Products, Inc.

Printed in the U.S.A.